Super 6 PJ-VC

Care and Use Instructions

Serial Number _____

Date Manufactured _____

TEEMARK MANUFACTURING
WARRANTY – TERMS OF SALE

Only the following conditions apply and shall be binding on the Seller regardless of any conditions contained in your inquiry or order. If the conditions stated herein are in any way unacceptable to you, please notify us at once; otherwise the following conditions will become the only conditions applicable to this transaction regardless of any conflicting terms or conditions contained in your inquiry or order.

1. **CONTRACT**. No order or quotation is binding on Seller and no contract is formed until Seller's formal acknowledgement of the order on Seller's own form is sent to Buyer. Any special terms or conditions noted on the face of Seller's quotation on which this order is based is incorporated herein by reference and made a part hereof as though specifically set forth herein.
2. **DELIVERY**. Without prejudice to any of Buyer's other rights hereunder, title and risk of loss shall fall to buyer on delivery of goods hereunder by Seller to carrier regardless of who bears the cost of freight. Seller shall not be liable for any delays in or failures of delivery due to acts of God or public authority, labor disturbances, accidents, fires, floods, extreme weather conditions, failure of and delays by carriers, shortages of materials, delays of a supplier due to causes beyond its control, or any other causes beyond the control of the Seller. Seller shall notify Buyer of any such delays as soon as it becomes apparent. In no event shall Seller be liable for consequential or special damage arising out of a delay in or failure of delivery.
3. **LIMITED WARRANTIES.** All goods sold hereunder are warranted to be free from defects in material and workmanship and/or to conform to applicable specifications, drawings, blueprints and/or samples. Seller's sole obligation under these warranties shall be to issue credit, repair or replace any item or part thereof which is proved to be other than as warranted. Seller shall have the sole right to determine whether such parts shall be repaired or replaced or whether credit shall be issued. No allowances shall be made for any labor charges of Buyer for replacement of parts, adjustments or repairs, or any other work unless advance, written authorization for such charges is given by Seller. In no event shall Seller be liable for collateral, consequential or contingent damages. If goods are claimed to be other than as warranted, Seller, upon notice promptly given, will either examine the goods at the Buyer's site or issue shipping instructions for return to Seller (transportation costs prepaid by Buyer), and if any goods are proved to be other than warranted, transportation costs (cheapest way) to and from Seller's plant will be borne by Seller and reimbursement or credit will be made for amounts so expended by Buyer. Every such claim for breach of the warranties herein contained shall be deemed to be waived by the Buyer unless made in writing within 90 DAYS from the date of shipment of the goods to which such claims relates. These warranties shall not extend to any goods or parts thereof which have been subjected to misuse or neglect, damaged by accident, rendered defective by reason of improper installation or used for other than the express purpose for which it was designed and built, or by the performance of repairs or alterations outside of Seller's plant, except when performed under seller's specific authority. These warranties shall not apply to any goods or parts thereof furnished by Buyer or acquired from others at Buyer's request and/or to Buyer's specifications. In no event shall the Seller be liable for contingent or consequential damages. **This warranty is in lieu of all other warranties.**
4. **CHANGES IN SPECIFICATIONS OR DESIGN.** Should Buyer request that changes be made in the specifications or design relating to any goods, delivery dates and schedules shall be revised accordingly, if necessary, and an equitable adjustment, upward or downward, be made in price so far as warranted?
5. **TERMINATION, REDUCTION IN QUANTITY, RESCHEDULING DELIVERY.** In the event Buyer desires to terminate any part or all of the work to be done hereunder, reduce the quantity of goods ordered, or reschedule the delivery of any goods, fair compensation shall be made to the Seller. Seller shall recover without duplication the contract price for articles which have been completed, the actual costs incurred by Seller which are properly allocable or apportion able under recognized commercial accounting practices to terminated work (including cost of discharging liabilities) plus a reasonable profit, the increased cost incurred by Seller by reason of a revision in the delivery schedule.
6. **BUYER'S PROPERTY.** Any patterns, equipment or materials furnished by Buyer shall be used only in the production of goods ordered by Buyer and not otherwise, unless by Buyer's written consent. Seller agrees to exercise reasonable care with respect to such property while in its possession and control, but shall not be responsible for loss or damage occurring without its fault or negligence or for ordinary wear and tear. When, for two (2) consecutive years, no orders are received form the Buyer for a particular product, any

tooling or equipment, whether owned by Buyer or Seller, required for producing such product, as well as any inventory of such product, may be destroyed by seller without notice to buyer or liability to Seller.

7. **PATENT INFRINGEMENT.** Seller shall defend and save harmless the Buyer from any claim that any product or article sold to the Buyer hereunder in and of itself infringes any United States letters patent by reason of its sale provided Seller is notified in writing within ten (10) days after such claim is made against the buyer and provided further that seller is permitted to defend the same in Buyer's name if action brought. If the product or articles sold to the buyer hereunder is manufactured by the Seller according to a design or specification furnished by the Buyer, the Buyer will defend and save harmless the Seller from any claim of infringement of any letters patent.
8. **PATENT AND DATA RIGHTS.** Seller will comply with all applicable federal, state and local laws, provided however, that the Seller will not be bound by Armed Services Procurement Regulation 9-202, Rights in Data: Defense procurement Circular #24, or any other regulation requiring the Seller to provide Technical data, either limited or unlimited, to any representative of the federal government or agency thereof, unless affirmatively and specifically agreed to in writing by the Seller.
9. **PROPRIETARY DESIGN.** Unless the design for the goods shall have been furnished by the Buyer to the Seller and used by the Seller in manufacturing the goods, the design of the products supplied to the Buyer are proprietary. The Buyer agrees not to reproduce these products or their design for his own use or for resale, except where necessary for maintenance of said goods.
10. **BUYER SPECIFIED SOURCES.** Where Buyer supplies parts and/or materials to be used in connection with the work to be performed and materials to be furnished by the Seller, subcontract work of any kind is performed for Seller by a source specified or selected by Buyer, Buyer assumes, and Seller is correspondingly relieved from all responsibility where the merchandise supplied by Seller is other than as warranted and where the reason therefore is due to the work performed by the source so specified or selected by Buyer or parts supplied by Buyer. Buyer further agrees that in such instances Buyer will defend, at no cost to Seller, every suit which shall be brought against Seller by reason of the defects in such parts supplied by Buyer or operations so subcontracted at Buyer's request.
11. **TAXES.** Sales and use taxes, payable by Buyer, which are presently or may hereafter be imposed by any taxing authority, are not included in the sales price; any direct or excise tax, payable by Seller, which may hereafter be imposed by any taxing authority, upon the manufacture, sale or delivery of products covered by this order, or any increase in rate of any such tax now in force, shall be added to the sale price. If not collected at time of payment of sale price, Buyer will hold Seller harmless.
12. **APPLICABLE LAW.** This contract shall be governed by the law of the State of Minnesota. The invalidity of any one clause or portion of this contract shall have no effect on the validity of any other section or portion thereof. Failure at any time of Seller to enforce any provision of this contract, or to exercise an option hereunder, or to require performance by Buyer of an provision hereof, shall in no way be construed as a waiver nor in any way affect the right of Seller to thereafter enforce each and every provision. A waiver by Seller of a term or condition hereof shall not be deemed a waiver of any other term or condition hereof or as a future waiver thereof. Sites of the contract shall be deemed Seller's corporate offices.
13. **PREVAILING TERMS.** Seller's standard terms of sale shall supplement and compliment Buyer's terms and conditions of sale, and both shall form the contract. However, if there is a conflict on content, interpretation, construction, or on any other points, between Buyer's and Seller's terms and conditions of sale, Seller hereby expressly rejects such conflicting terms and/or conditions of Buyer, and Seller's terms and conditions shall prevail and Buyer's acceptance of Seller's terms and conditions as set forth herein.

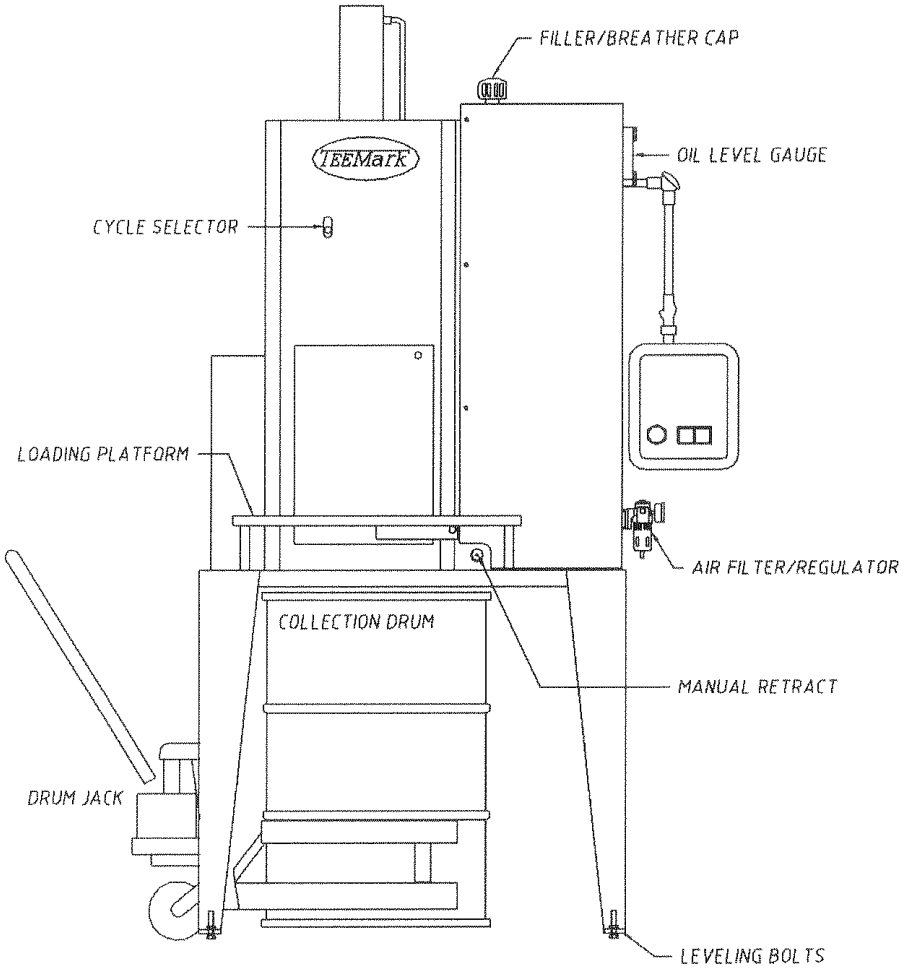
FILLER/BREATHER CAP
TEEMark
OIL LEVEL GAUGE
CYCLE SELECTOR
LOADING PLATFORM
AIR FILTER/REGULATOR
COLLECTION DRUM
MANUAL RETRACT
DRUM JACK
LEVELING BOLTS

SUPER 6 PJ-VC

WARNING

EXPLOSION HAZARD

All TeeMark explosions proof can and drum crushers are manufactured in accordance with the National Electrical Code for **Class 1, Group D** hazardous locations.

It is the responsibility of the end user to properly install and operate the crusher in compliance with all local and national electrical codes for hazardous locations.

THIS MEANS

All sources of ignition must be a safe distance away from the crusher while it is being operated. (As determined by your insurance underwriter)

Sources of ignition include:

1. All forklift trucks. Propane, gas and electric powered.
2. All air compressors
3. Any motor control equipment not rated for hazardous locations (class 1, group D)
4. Any electrical equipment such as radios, tape players, etc.

Congratulations on choosing a TeeMark Super 6PJ-VC Can/Pail/Aerosol Crusher.
The Super 6 PJ-VC is designed to process all types of aerosol cans. The liquid contents of the cans are collected in a 55 gallon pail directly under the machine. The propellants and VOC's are collected and vented by means of a centrifugal blower system.

Your crusher has been thoroughly tested before leaving the factory.

SAFETY FEATURES

The Super 6PJ-VC is equipped with a safety interlock system that is linked to the crushing chamber door. The interlock system prevents operator injury by stopping all functions of the machine in the event that the crushing chamber door is opened during the crushing process.
In addition the blower motor and the hydraulic motor are electrically interlocked to prevent operation of the hydraulic motor without first starting the blower motor, and also to shut down the crusher motor in the event of a blower motor failure.

AIR HANDLING SYSTEM FEATURES

The Super 6PJ-VC is designed to vent VOCs and propellant from the crushing chamber and the collection drum. A 24x24 bag filter (part #P04-0045) housed within the filtration cabinet filters particulates from the air stream. The Super 6PJ-VC will provide 250-350 CFM of particulate free air to be handled in accordance with local regulations.

ELECTRICAL CONNECTION

The explosion proof motors, motor controls, and connections on your crusher are UL listed and CSA certified for Class 1, Group D, Hazardous locations. It is up to the purchaser to have the final connections made by a licensed electrical contractor in compliance with the appropriate local and national electrical codes.

Single Phase Motor Options
1-1/2 hp, 230 volt, 16/8 FLA (full load amps)

5 hp, 230 volt, 21 FLA

1 hp, 230 volt, 12/6 FLA – Ventilation System

Three Phase Motor
1-1/2 hp, 230/460 volt, 4.4/2.2 FLA (full load amps)

5 hp, 230/460 volt, 13/6.5 FLA
(The motors stated above are the standards and you may have a different hp, volts, hertz, or phase)

CARBON FILTER PACKAGE

The optional Carbon Filtration Package consists of a 55 gallon carbon filter drum and is connected to the machine blower by a 5" flexible duct.

The air coming off the Carbon Filter Drum must be vented either to an exhaust system or vented out of the building.

SUPER 6PJ-VC ASSEMBLY INSTRUCTIONS

Tools required are two (2) 9/16 inch wrenches, two (2) ½ inch wrenches, one 7-16 inch wrench, level, hammer, pry bar, alignment punch, small clevis, small chain, and a fork lift or overhead crane. The machine weighs approximately 1800 pounds. You will need approximately 9-1/2 feet of overhead clearance (more if using a forklift) to place the machine on the stand.

Dismantle crate and remove all the bolts fastening the machine to the crate.

Remove the stand and locate the front of the stand. Position the stand in your desired location leaving ample room around the machine to maneuver the drum jack and drum. Your stand is equipped with leveling bolts; level the stand before continuing. Check you stand height for clearance; if a drum will not fit under the stand, the leveling bolts may be used to raise the stand. It is recommended that the stand be anchored to the floor using the holes provided in the pads on the legs. These anchor bolts should be 3/8 or ½ inch by 4-1/2 inch long.

Remove baffle plate from the crate and position it on the top of the stand. This plate will drop down inside and you will need to check your orientation as the machine is not centered on the stand.

The machine is equipped with a lift eye located to the right of the hydraulic cylinder. Attach the crane or forklift to the lift eye using a clevis and chain. Lift machine and locate it with the door facing the front of the stand. An alignment punch will help to align bolt holes as the machine is lowered onto the stand. Once set into place, bolt the machine to the stand using the four 3/8-16x1-1/4 inch bolts and lock washers provided.

Attach the staging table to the machine in from of the door using the two 3/8-16x1 inch bolt, nuts and lock washers provided.

Attach the vapor bonnet to the bottom of the can ejector chute using the six ¼-20x1 inch bolts, nuts and lock washer provided.

From the 5 inch discharge on the blower extend your duct work to the exterior of the building.

Be sure that there is a source of makeup air available to the room or building where the crusher is to be located.

Once fully assembled an Electrician will need to complete the electrical hookup in accordance with local codes. See the following pages for wiring diagram.

Level and adjust the Manometer per instructions found on one of the following pages.

SUPER 6 PJ-VC
ASSEMBLY

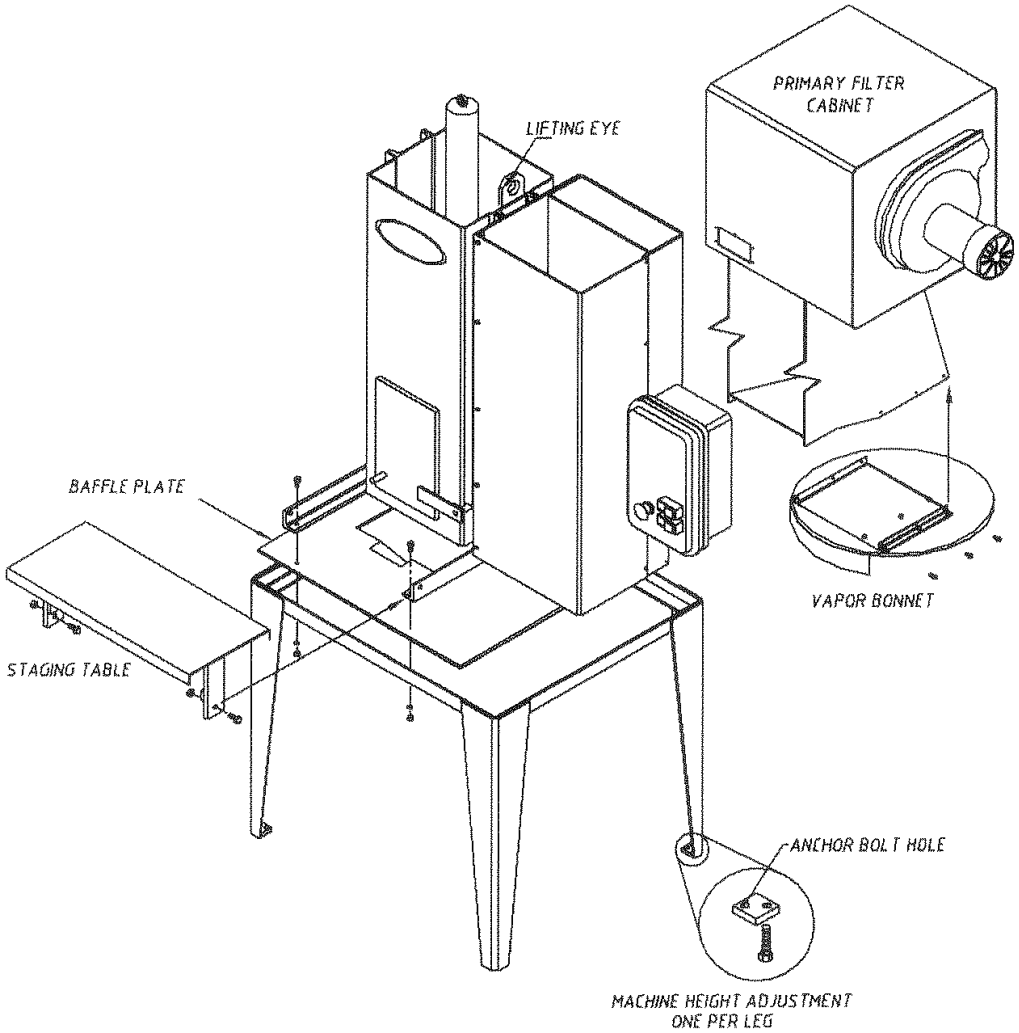

FILLING THE MANOMETER

Adjust the Manometer until the Level bubble is centered in the level vial.
Turn the zero set knob counterclockwise until it stops, then turn clockwise 3 full turns. This puts zero in approximately the middle of the travel adjustment in either direction. Remove the fill plug and fill with gage fluid until fluid reaches zero on scale. Minor adjustments can be made to adjust zero by adjusting the zero-set knob. Replace fill plug. If gage is overfilled, remove excess by inserting pipe cleaner through the fill port to blot up excess oil

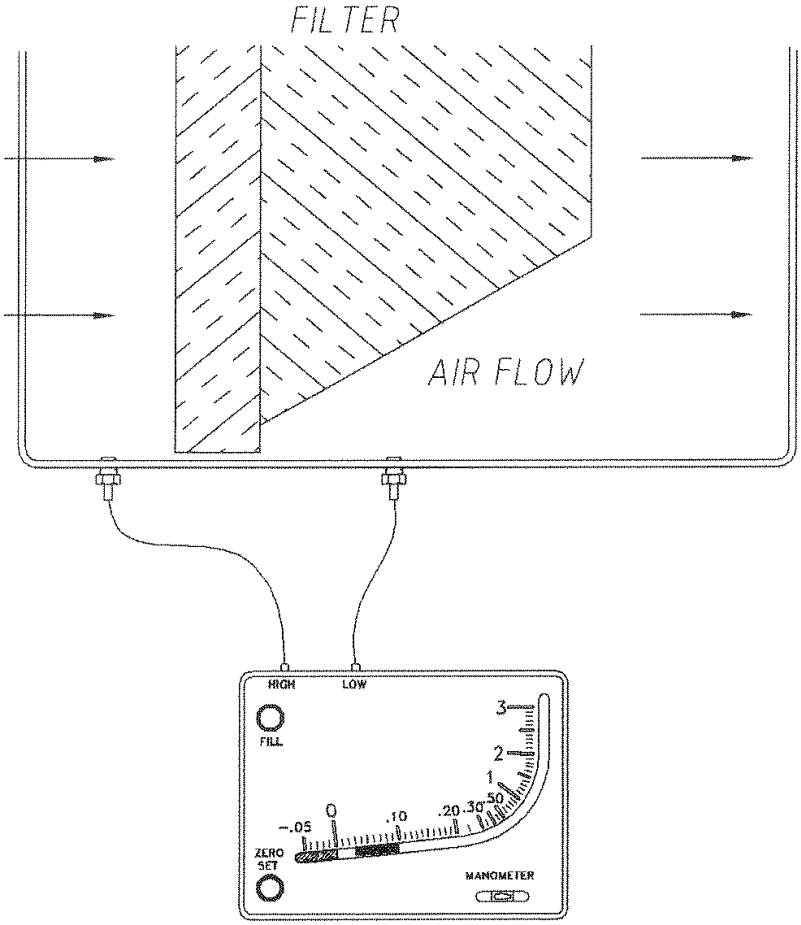

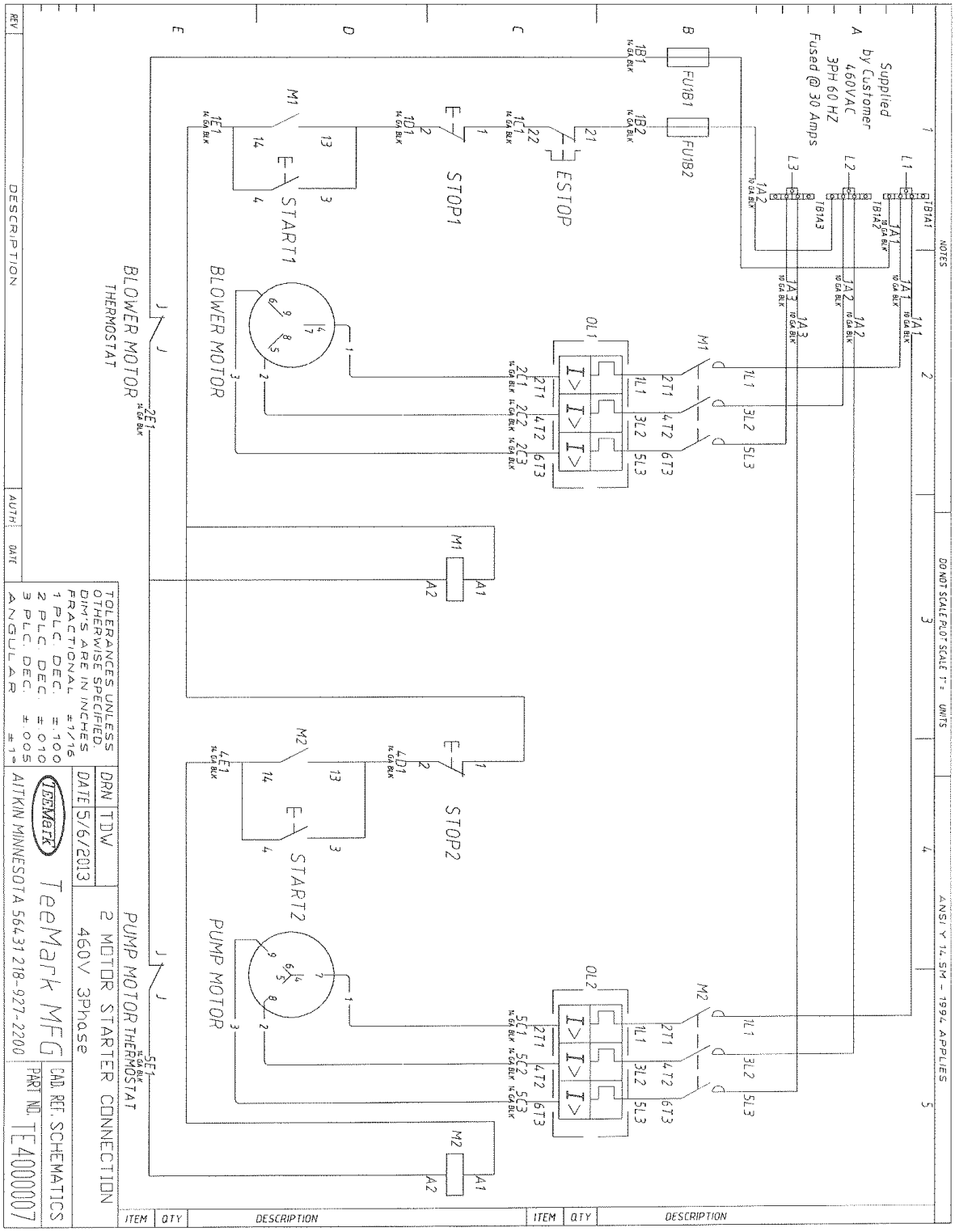
Supplied by Customer
460VAC
3PH 60 HZ
Fused @ 30 Amps
L1
L2
L3
TB1A1
TB1A2
TB1A3
1A1
1A2
1A3
FU1B1
FU1B2
1B1
1B2
ESTOP
STOP1
STOP2
START1
START2
M1
M2
OL1
OL2
BLOWER MOTOR
PUMP MOTOR
THERMOSTAT
1E1
2E1
4E1
5E1
1D1
2C1
2C2
2C3
4D1
5C1
5C2
5C3
NOTES
DO NOT SCALE PLOT SCALE 1" = UNITS
ANSI Y 14.5M - 1994 APPLIES
REV
DESCRIPTION
AUTH
DATE
TOLERANCES UNLESS OTHERWISE SPECIFIED.
DIM'S ARE IN INCHES
FRACTIONAL ±1/16
1 PLC. DEC. ±.100
2 PLC. DEC. ±.010
3 PLC. DEC. ±.005
ANGULAR ±1°
DRN TDW
DATE 5/6/2013
TeeMark
TeeMark MFG
AITKIN MINNESOTA 56431 218-927-2200
PUMP MOTOR THERMOSTAT
2 MOTOR STARTER CONNECTION
460V 3Phase
CAD REF. SCHEMATICS
PART NO. TE4000007
ITEM
QTY
DESCRIPTION

VERIFY CORRECT MOTOR ROTATION

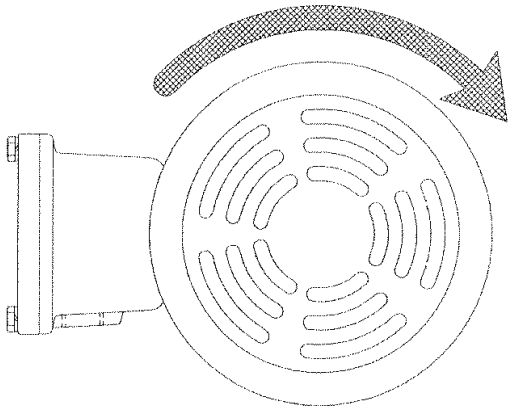

CRUSHER MOTOR ROTATION
BLOWER MOTOR ROTATION

CLOCKWISE

VIEWED FROM THE FAN END OF THE MOTOR

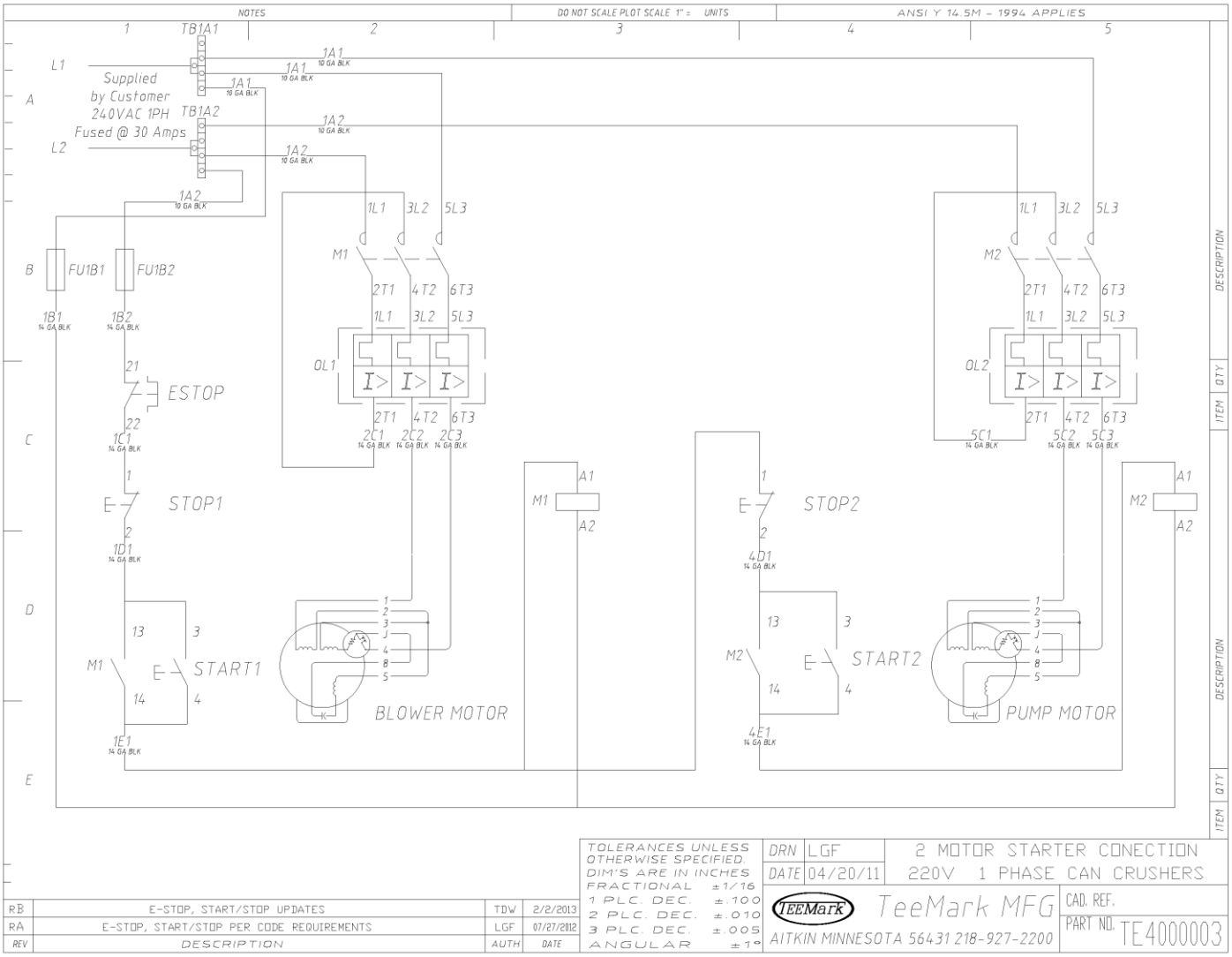
NOTES
DO NOT SCALE PLOT SCALE 1" = UNITS
ANSI Y 14.5M - 1994 APPLIES
TB1A1
TB1A2
L1
L2
Supplied by Customer 240VAC 1PH Fused @ 30 Amps
1A1 10 GA BLK
1A2 10 GA BLK
FU1B1
FU1B2
1B1 14 GA BLK
1B2 14 GA BLK
ESTOP
1C1 14 GA BLK
STOP1
1D1 14 GA BLK
START1
1E1 14 GA BLK
M1
1L1 3L2 5L3
2T1 4T2 6T3
OL1
2C1 2C2 2C3 14 GA BLK
BLOWER MOTOR
A1
A2
STOP2
4D1 14 GA BLK
START2
4E1 14 GA BLK
M2
OL2
5C1 5C2 5C3 14 GA BLK
PUMP MOTOR
DESCRIPTION
QTY
ITEM
TOLERANCES UNLESS OTHERWISE SPECIFIED
DIM'S ARE IN INCHES
FRACTIONAL ±1/16
1 PLC. DEC. ±.100
2 PLC. DEC. ±.010
3 PLC. DEC. ±.005
ANGULAR ±1°
DRN LGF
DATE 04/20/11
2 MOTOR STARTER CONECTION
220V 1 PHASE CAN CRUSHERS
TeeMark MFG
AITKIN MINNESOTA 56431 218-927-2200
CAD. REF.
PART NO. TE4000003
RB E-STOP, START/STOP UPDATES TDW 2/2/2013
RA E-STOP, START/STOP PER CODE REQUIREMENTS LGF 07/27/2012
REV DESCRIPTION AUTH DATE

AIR REQUIREMENTS
The Super 6PJ-VC uses less than 4 CFM and requires a maximum air pressure of 90 psi. All crushers are equipped with a filter/regulator (part # T9007521). The pressure of the filter regulator must be set at 90 psi to insure proper machine performance.

HYDRAULIC FLUID
The hydraulic reservoir must be kept full to a level that is visible in the temperature/sight gauge throughout the complete ram cycle. Use a premium grade antiwear hydraulic oil, 150 viscosity grade 46 (medallion plus hydraulic AW46 or equal). This is the same anitwear hydraulic fluid that is typically used in farm tractor and dump trucks. It should be available at most auto or farm supply stores. Total fluid capacity is approximately 20 US gallons.

OIL FILTER
A medium pressure, high performance 10 micron (absolute) oil filter is standard on all TeeMark Crushers. It should be changed after every 500 hours of operation.

For Machine Serial No. 20714 thru 20772: Part Number P02-0090

For Machine Serial No. 20619 thru 20713: Part Number P02-0088

For Machine Serial No. 20772 and greater; Part Number P02-0088

For Machine Serial No. 30000 and greater; Part Number P02-0081

VALVE SETTINGS
All hydraulic and pneumatic valve components have been preset at the factory.

DO NOT RE-ADJUST ANY VALVE SETTINGS WITHOUT FIRST CONSULTING THE MANUFACTURER.

OPERATING INSTRUCTIONS

START UP PROCEDURE

Make certain that all necessary electrical connections are make before proceeding.

INITIAL WARMUP

IT IS RECOMMENDED THAT ALL CRUSHER RUN IDLE FOR 5-10 MINUTES TO ALLOW THE HYDRAULIC OIL TO REACH OPERATING TEMPURATURE. THIS IS ESPECIALLY IMPORTANT WHEN AMBIENT TEMPERATURE IS BELOW 65 F

1. Position an empty 55-gallon drum under the sealing flange just below the crushing chamber using the drum jack that is supplied with the crusher. Raise the drum until it contacts the sealing flange. **DO NOT LIFT THE DRUM PAST THE POINT OF CONTACT WITH THE SEALING FLANGE, THIS COULD CAUSE DAMAGE TO THE CRUSHER.**
2. Place a second 55-gallon drum below the vapor bonnet, to collect the crushed cans.
3. Begin by pulling out the red e-stop button.
4. Start the blower by pushing blower start push button. *The blower motor and the crusher motor are interlocked to prevent the crusher from operating without the blower motor energized.*
5. Open the crushing chamber door.
6. Start crusher motor by pushing the crusher start push button
7. Place a can into the crushing chamber in an upright position centered over the piercer opening.
8. Close the crushing chamber door and the crushing cycle will begin automatically. The crushed can will be ejected automatically into the rear drum.
9. When the crushing cycle is complete the door will open automatically and the crusher is ready for the next crushing cycle.

DO NOT ATTEMPT TO OPEN THE DOOR BY HAND. THIS CAN RESULT IN A MALFUNCTION OF THE PNEUMATIC CONTROL SYSTEM.

MONITORING THE VAPOR CONTROL SYSTEM

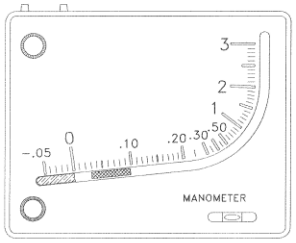

RECOMMENDED REGULAR MAINTENANCE

KEEP A CLEAN MACHINE! Those who clean the crusher after each shift and prevent a buildup of dried paint, have better running machines than those who neglect this important task.

One method of cleaning involves saving the cans of thinner and other solvents until the end of the shift. This will clean the piercer area and the ejector bars. To remove a buildup of dried paint, a flat blade scraper works well as does a small pneumatic chisel.

Some crusher operators will apply a coating of grease to the inside of the crushing compartment this works well to prevent the buildup of paint.

GREASE There are four grease fittings on the crusher. These should receive one shot of grease every third shift. The fitting are located as follows:

1. On the left side of the crusher half way up the main channel.
2. Below the door shaft next to the manual retract button.
3. And one on either side of the ejector chute.

RECOMMENDED PERIODIC MAINTENANCE

1. Change the hydraulic oil filter element every 500 hours; more often if your system is in an extremely dirty atmosphere.
2. Change the hydraulic oil completely every 5000 hours or 5 years of operation, whichever comes first.
3. Change air particulate filter (part number P04-0045) when the pressure drop indicator reaches .01 on the Manometer scale. (see picture on next page)
4. It is recommended that the piercer by sharpened periodically to prevent undue pressure buildup inside the cans.
5. Remember your machine is only as good as your maintenance.

The vapor control system consists of three major components. These are the filter cabinet, a centrifugal blower and a manometer. The manometer is a system monitoring device that will indicate two important conditions.

A gauge reading below **.**03 indicates a blower off or blower malfunction condition.

A gauge reading above **.10** indicates a dirty or clogged particulate filter (part number P04-0045). To change air filter remove the filter access panel and slide out old filter. Replace the dirty filter with a new clean filter making sure that the filter edges are lying flat against the filter frame.

RETACTING CYLINDER/SQUEEZE HEAD

In the event of the squeeze head becoming stuck at the bottom of the stroke, it may be necessary to retract the squeeze head manually.

1. On the front of the machine below the door shaft is a button marked manual retract.
2. With the hydraulic motor running, air supply turned on, and the door open.
3. Push in and hold the button, close the door and hold the button in until the cycle ends and the door opens.
4. The crusher is now set to resume normal crushing operations

Conditions that will cause the squeeze head to become stuck at the bottom of the stroke are

1. Inadequate power supply, causing the circuit breaker to trip when crusher reaches full crushing pressure.
2. Hydraulic system relief valve pressure drifts and causes the relief valve to open not allowing pressure valve to shift and retract the cylinder.
3. Interruption in the sir supply.

3 POSITION CYCLE SELECTOR SWITCH

Your Super 6 PJ-VC is equipped with a cycle selector switch located on the front cover above the door.
The cycle selector switch enables the operator to change the length of the stroke by simply moving the switch lever to the desired setting.
In the FULL position you are able to process up to a 6-gallon container.
The SHORT position reduces the strike by 60% when processing 1-gallon and smaller.
The EJECTOR OFF position disables the ejector system. The crusher door will have to be opened manually at the end of the cycle when in the ejector off mode.

DO NOT OPEN THE DOOR UNTIL THE CRUSHING CYCLE IS COMPLETE AND THE SQUEEZE HEAD IS FULLY RETRACTED

PROCESSING AEROSOL CANS

Installing the conversion kit.

The Aerosol Conversion Kit, consists of the aerosol piercer and the aerosol piercer plate.

To install, disconnect the electrical power and remove the air supply. Looking under the crushing chamber, locate the piercer mounting bolts. Remove the can piercer and install the aerosol piercer in the same location using the same mounting bolts.

Next, locate the 4 holes in the ejector bars inside the crushing chamber. These may be filled with dried paint and should be cleaned out. Mount the aerosol piercer plate to the crusher plate using the 4 bolts as shown.

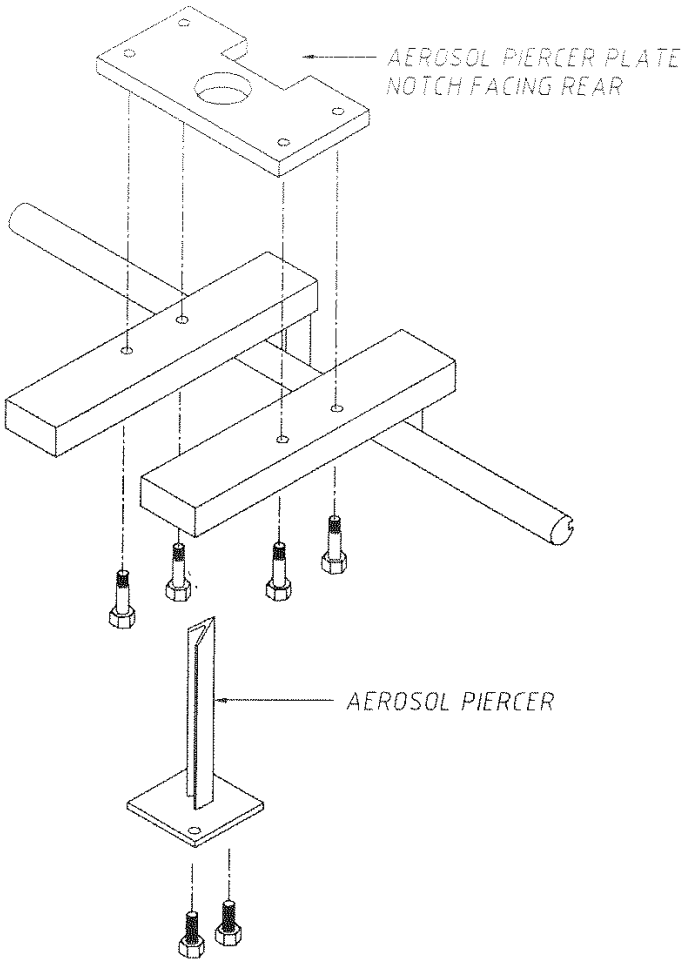
AEROSOL PIERCER PLATE
NOTCH FACING REAR
AEROSOL PIERCER

CLEANING THE EJECTOR CHUTE

***** CAUTION *****

ALWAYS TURN THE POWER OFF WHEN SERVICING THE CRUSHER OR WHEN NOT IN USE.

The ejector chute area can be accessed for cleaning and for the clearing out cans.

On the side of the ejector chute are 2 bail clamps (see illustration at right).

Unlatch the clamps, and swing the rear section of the chute away from the crusher.

This will allow for the cleaning of the chute area and the back door.
The back door should be kept clean to prevent the buildup of paint. Paint buildup on the back door will increase the weight of the door and will lead to undue stress and premature failure of the door actuating components.

Also, paint buildup on the door will prevent the door from closing properly and will lead to excess paint leakage into the chute area, and consequently, excess paint will drip into the can collection drum.

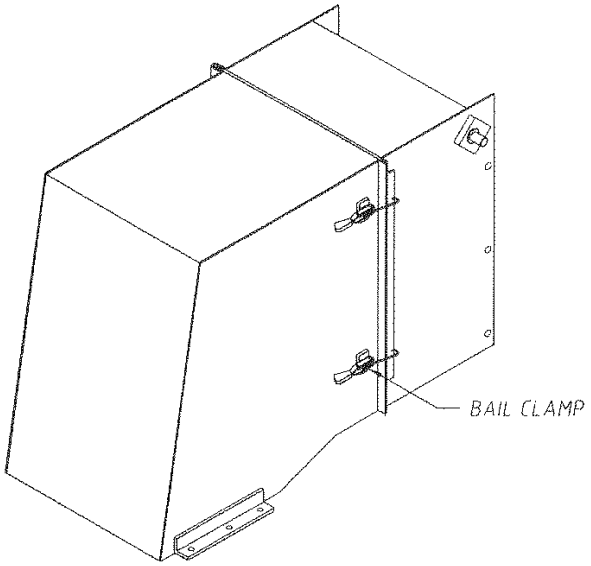

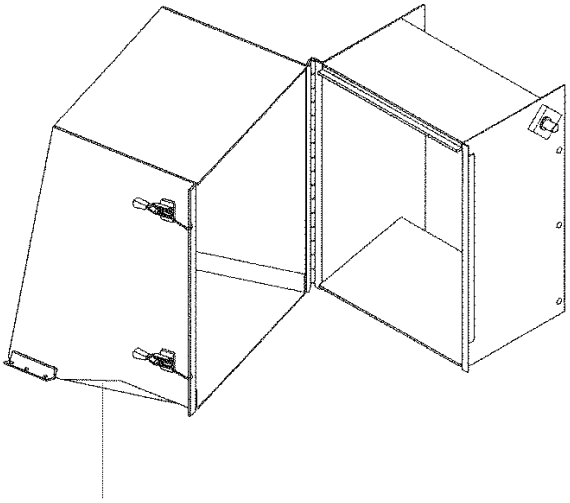

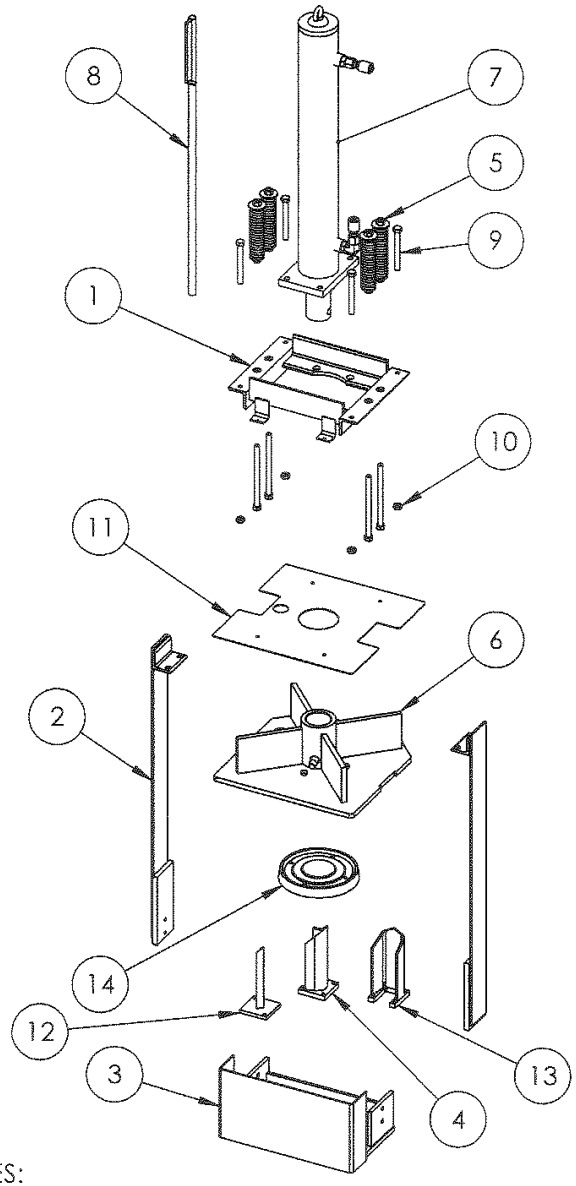

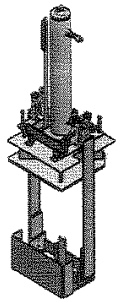

ITEM NO.	PART NUMBER	DESCRIPTION	QTY.
1	T9001583	CYLINDER CARRIAGE	1
2	T9001599	PIERCER CONNECTING STRAP	2
3	T9001595	PIERCER CARRIAGE	1
4	T9001606	PIERCER	1
5	T9001608	SPRING ASSEMBLY	4
6	T9001578	SQUEEZE HEAD	1
7	T9001674	HYDRAULIC CYLINDER	1
8	T9001614	FLAG POLE	1
9	BOLT	0.5" X 4.5"	4
10	NUT	0.5"	4
11	T9001627	PLATE, BAFFLE	1
12	T9001688	AEROSOL PIERCER	1
13	T9001692	XL PIERCER	1
14	T9001577	MANDREL	1

NOTES:
1. MANDREL IS SHOWN UPSIDE DOWN FOR ILLUSTRATION PURPOSES

UNLESS OTHERWISE SPECIFIED:	DRN	BCA	HYDRAULIC PIERCER ASSEMBLY
DIMENSIONS ARE IN INCHES TOLERANCES: FRACTIONAL: 1/16 ONE PLACE DECIMAL ±.1 TWO PLACE DECIMAL ± .02 THREE PLACE DECIMAL ± .005 ANGULAR: ± 1 DEGREE	DATE	5/9/2014	
	TeeMark Manufacturing AITKIN, MN 56431 218-927-2200		MODEL NO: PART NO. T9001610

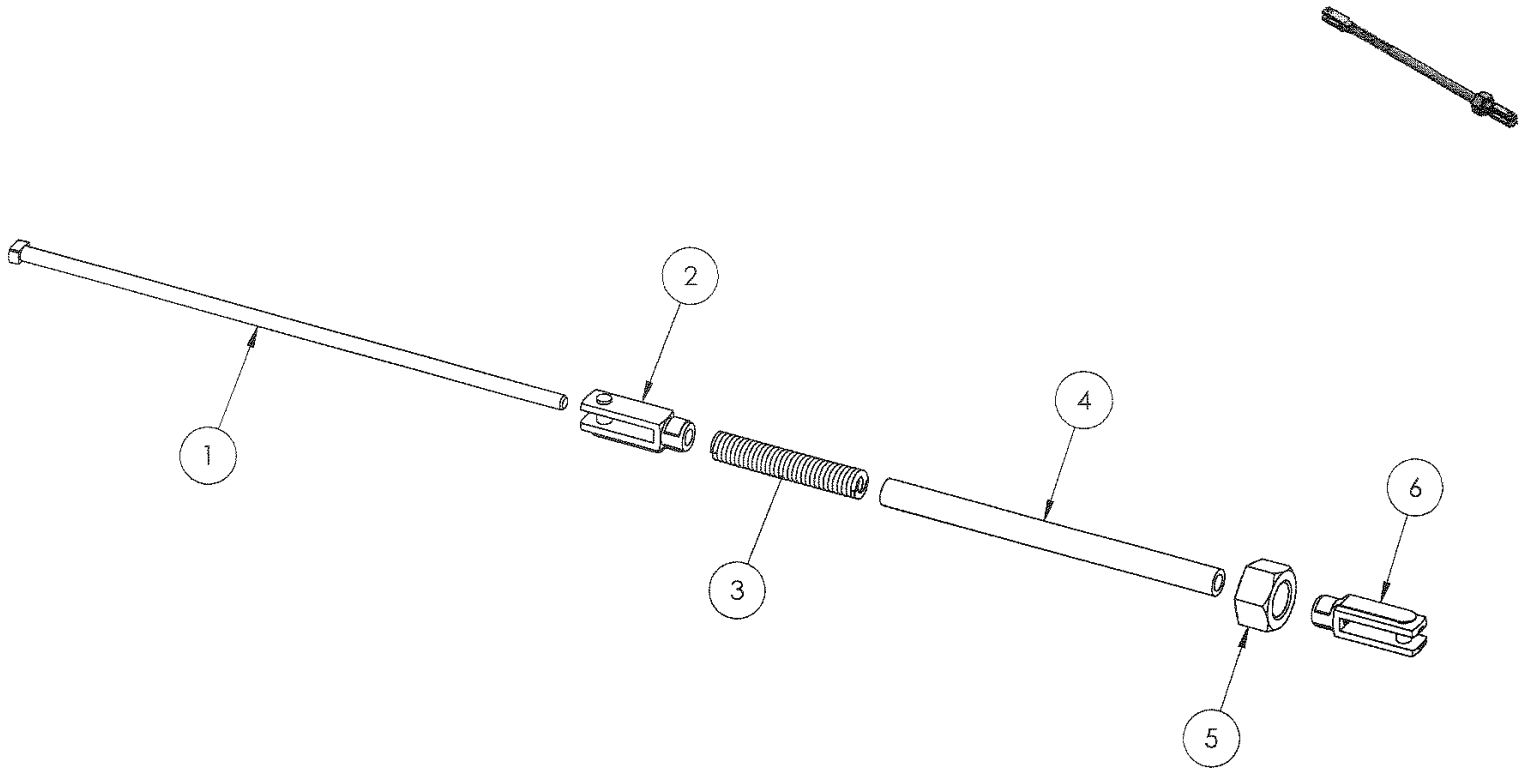

ITEM NO.	PART NUMBER	DESCRIPTION	QTY.
1	T9001633	BOLT, MODIFIED	1
2	T9001636	CLEVIS	1
3	P04-0033	SPRING	1
4	T9001634	TUBE	1
5	NUT	1"	1
6	P01-0106	CLEVIS	1

UNLESS OTHERWISE SPECIFIED:

DIMENSIONS ARE IN INCHES
TOLERANCES:
FRACTIONAL: 1/16
ONE PLACE DECIMAL ±.1
TWO PLACE DECIMAL ± .02
THREE PLACE DECIMAL ± .005
ANGULAR: ± 1 DEGREE

DRN BCA

DATE 5/12/2014

LINKAGE ROD ASSEMBLY

TeeMark Manufacturing
AITKIN, MN 56431 218-927-2200

MODEL NO:

PART NO. T9001635

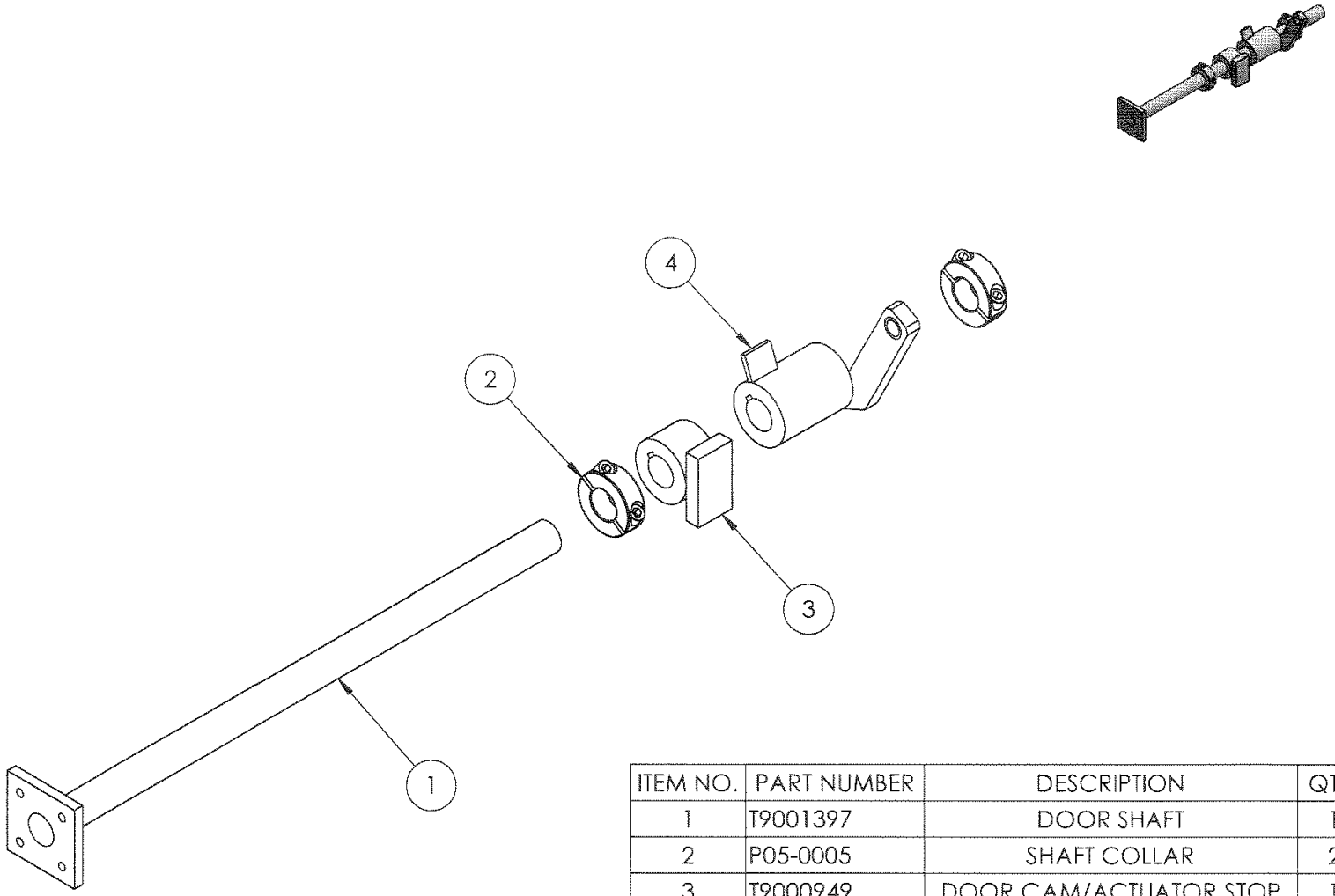

ITEM NO.	PART NUMBER	DESCRIPTION	QTY.
1	T9001397	DOOR SHAFT	1
2	P05-0005	SHAFT COLLAR	2
3	T9000949	DOOR CAM/ACTUATOR STOP	1
4	T9000952	DOOR SHAFT LEVER	1

UNLESS OTHERWISE SPECIFIED:
DIMENSIONS ARE IN INCHES
TOLERANCES:
FRACTIONAL: 1/16
ONE PLACE DECIMAL ±.1
TWO PLACE DECIMAL ± .02
THREE PLACE DECIMAL ± .005
ANGULAR: ± 1 DEGREE

DRN BCA
DATE 5/9/2014

DOOR SHAFT ASSEMBLY

TeeMark Manufacturing
AITKIN, MN 56431 218-927-2200

MODEL NO:
PART NO. T9001398

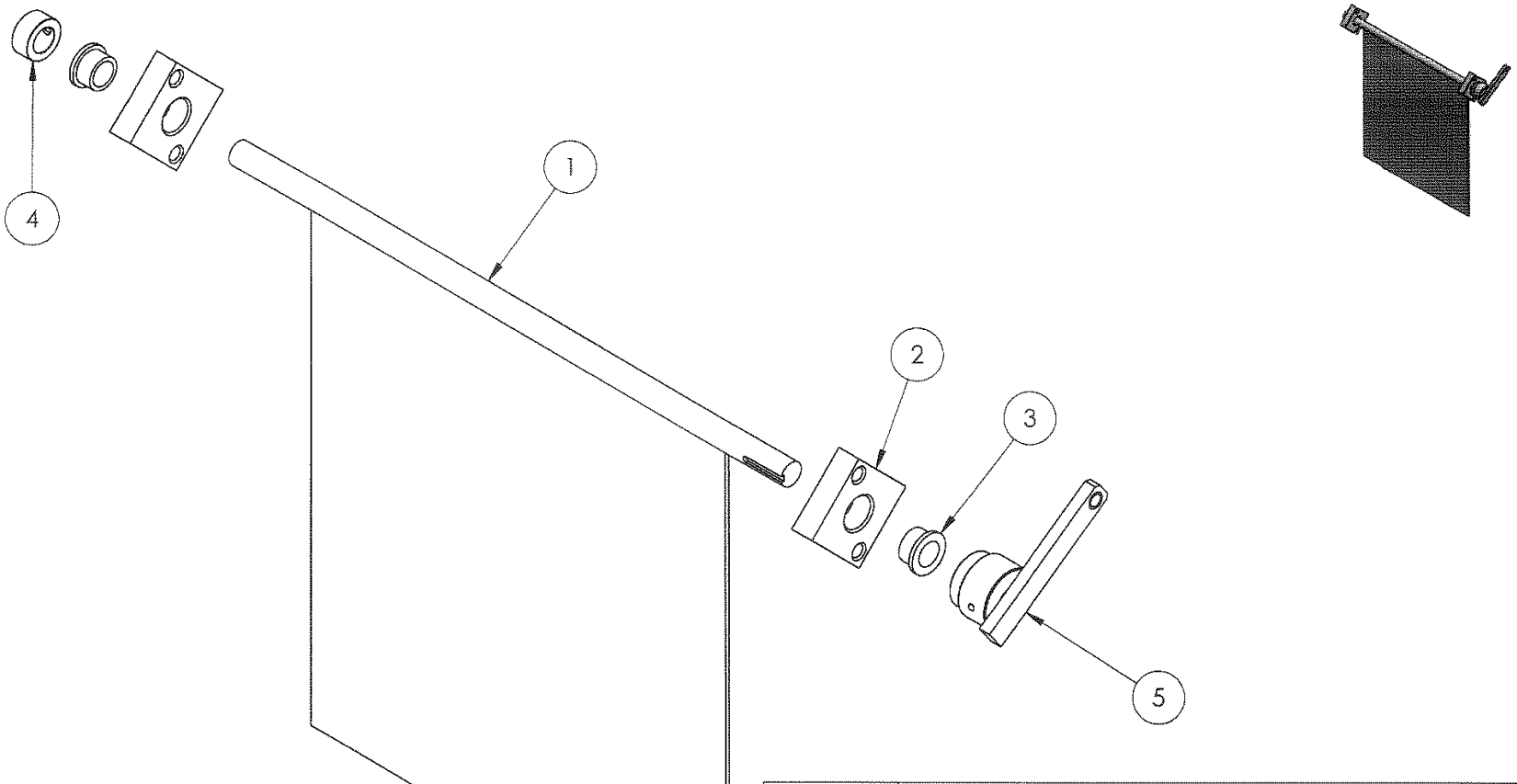

ITEM NO.	PART NUMBER	DESCRIPTION	QTY.
1	T9001644	EJECTOR DOOR	1
2	T9001053	BLOCK, BEARING	2
3	P04-0007	BUSHING	2
4	P05-0004	SHAFT COLLAR	1
5	T9001640	BACK DOOR ACTUATOR	1

UNLESS OTHERWISE SPECIFIED:
DIMENSIONS ARE IN INCHES
TOLERANCES:
FRACTIONAL: 1/16
ONE PLACE DECIMAL ±.1
TWO PLACE DECIMAL ± .02
THREE PLACE DECIMAL ± .005
ANGULAR: ± 1 DEGREE

DRN: BCA
DATE: 5/13/2014

EJECTOR DOOR ASSEMBLY

TeeMark Manufacturing
AITKIN, MN 56431 218-927-2200

MODEL NO:
PART NO. T9001645

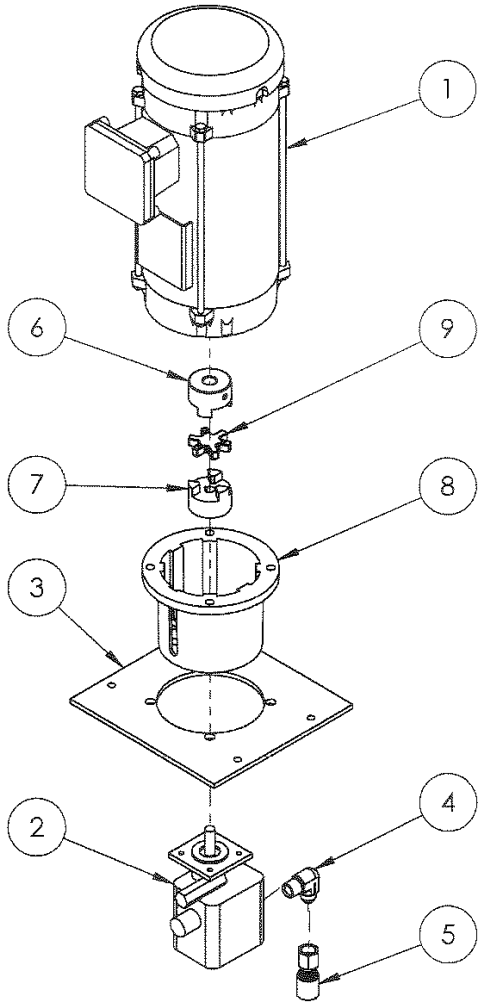

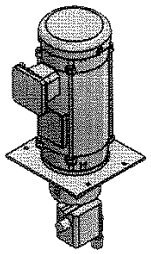

ITEM NO.	PART NUMBER	DESCRIPTION	QTY.
1	T9001126	MOTOR	1
2	P02-0084	PUMP	1
3	T9001092	MOTOR MOUNT	1
4	P02-0020	ELBOW	1
5	P02-0001	HOSE COUPLING	1
6	P04-0024	COUPLING HUB	1
7	P04-0025	COUPLING HUB	1
8	P02-0348	PUMP MOTOR ADAPTER	1
9	P04-0028	COUPLING SPIDER INSERT	1

UNLESS OTHERWISE SPECIFIED:

DIMENSIONS ARE IN INCHES
TOLERANCES:
FRACTIONAL: 1/16
ONE PLACE DECIMAL ±.1
TWO PLACE DECIMAL ± .02
THREE PLACE DECIMAL ± .005
ANGULAR: ± 1 DEGREE

DRN: BCA
DATE: 2/6/2014

MOTOR/PUMP ASSEMBLY

TeeMark Manufacturing
AITKIN, MN 56431 218-927-2200

MODEL NO:
PART NO. T9001119

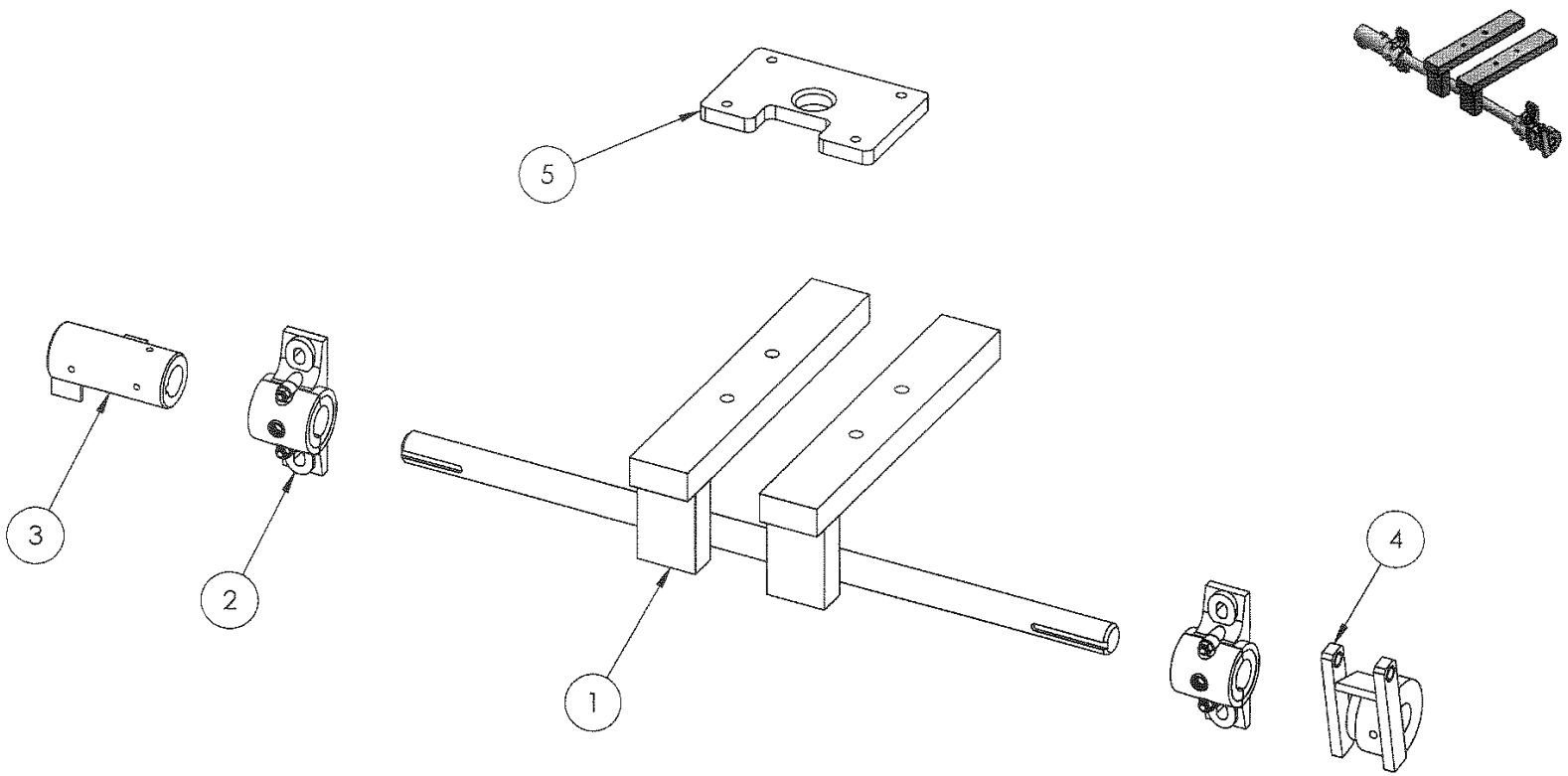

ITEM NO.	PART NUMBER	DESCRIPTION	QTY.
1	T9001387	EJECTOR	1
2	P04-0017	BEARING	2
3	T9001639	EJECTOR VALVE	1
4	T9001648	EJECTOR ACTUATOR	1
5	T9001589	PLATE, AEROSOL PIERCER	1

UNLESS OTHERWISE SPECIFIED:	DRN	BCA	EJECTOR ASSEMBLY
DIMENSIONS ARE IN INCHES TOLERANCES: FRACTIONAL: 1/16 ONE PLACE DECIMAL ±.1 TWO PLACE DECIMAL ± .02 THREE PLACE DECIMAL ± .005 ANGULAR: ± 1 DEGREE	DATE	5/9/2014	
	TeeMark Manufacturing AITKIN, MN 56431 218-927-2200		MODEL NO: PART NO. T9001388

BLOWER USE AND MAINTENANCE

All fans and blowers have rotating parts and pinch points. Severe personal injury can result if operated without guard.

Stay away from rotating equipment unless it is disconnected from its power source and all rotating parts have stopped moving.

No guarantee of any level of spark resistance is implied by spark resistant construction.

It has been demonstrated that aluminum impellers rubbing on rusty steel may cause high intensity sparks.

Air stream material and debris or other system factors may also cause spark.

NOTE:

If wheel set screws are loosened and/or wheel is removed from shaft, set screws must be replaced.

Set screws cannot be used more than once. Use knurled, cup point set screws with a locking patch.

MINIMUM REQUIRED SETSCREW TORQUE=65 INCH/LBS

Blower Fan Malfunctions and Causes

VIBRATION AND NOSE

Misalignment of fan wheel
Foreign material in fan causing unbalance
Worn bearings
Damaged wheel or motor
Broken or loose bolts and set screws
Bent shaft
Worn coupling
Fan wheel or drive unbalanced
Loose dampers
Speed too high or fan rotating in wrong direction
Vibration transmitted to fan from some other source.

CAPACITY OR PRESSURE BELOW RATING

Dirt in bearings
Incorrect direction of wheel rotation
Excessive belt tension
Speed to slow
Dampers not properly adjusted

OVERLOAD ON MOTOR

Poor fan inlet or outlet conditions (elbows, restrictions)
Speed too high
Air leaks in system
Damaged wheel
Total resistance of system higher than anticipated
Wrong direction of wheel rotation
Wheel mounted backwards on shaft
Bearings improperly lubricated
Motor improperly wired
Defective motor
Motor must be tested by motor manufacturer

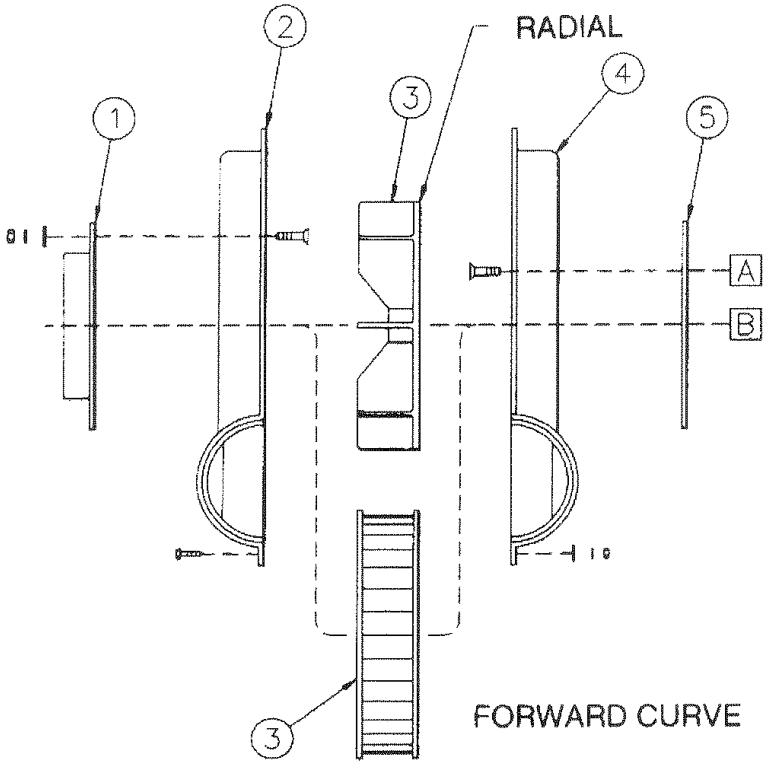

Replacement or spare parts may be ordered through your local Cincinnati Fan representative.

The following information should accompany parts orders:

1.Motor horsepower, frame size, motor speed, voltage, model number from motor nameplate, phase, cycle and enclosure.

Motor manufacturers catalog number.

3.Fan serial and model numbers from the FAN nameplate and a complete description of the part.

An adequate stock of repair parts is

MODEL PB
HOUSING/WHEEL COMPONENTS

1. Inlet side plate (if required).
2. Housing, inlet side.
3. Wheel (Radial or Forward Curve).
4. Housing, drive side.
5. Drive side plate (if required).

NOTE:
Rotation determined by viewing Motor from the fan end, not looking into inlet.

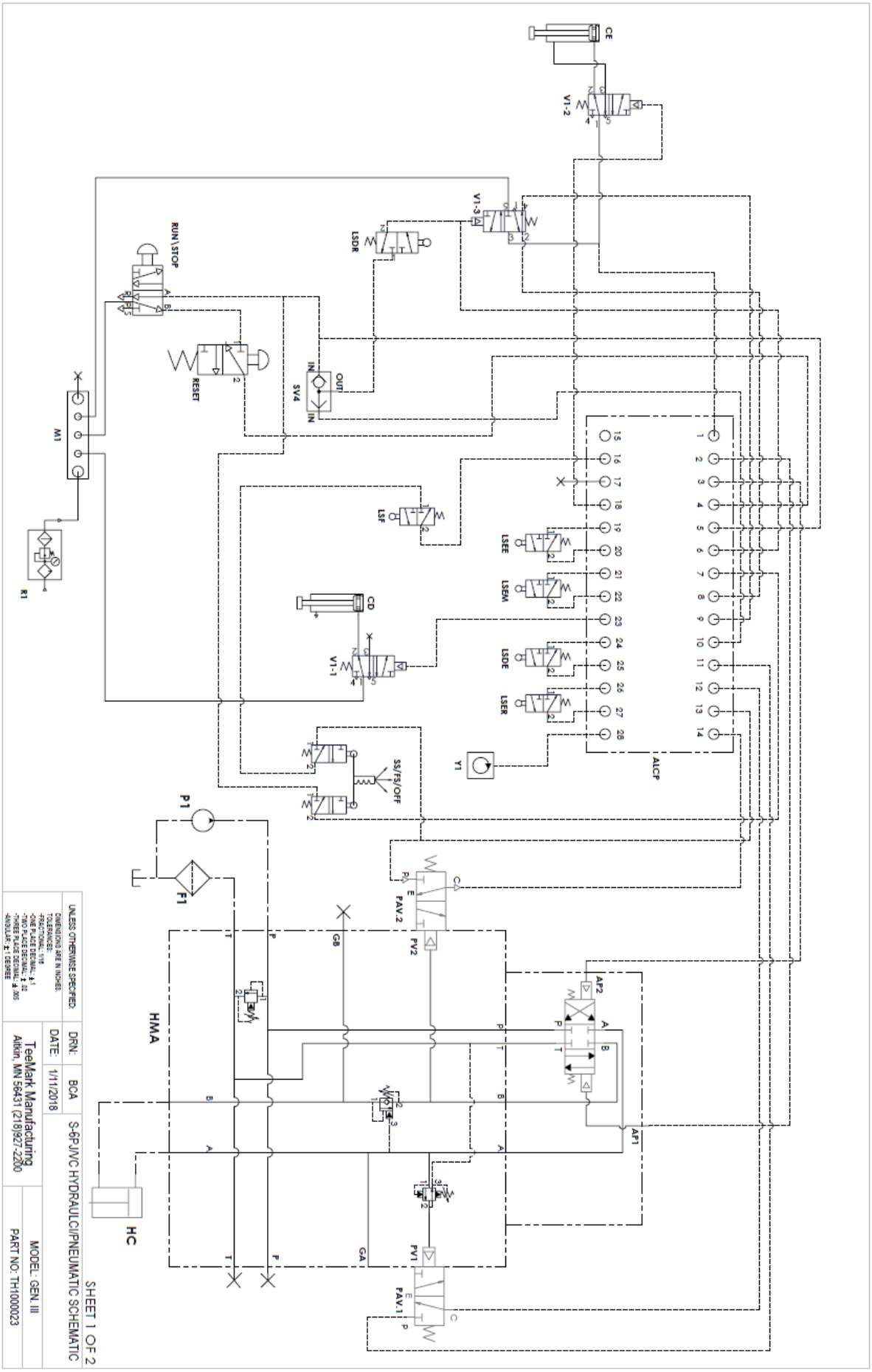
CE
V1-2
V1-3
LSDR
RUN\STOP
RESET
SV4
IN
OUT
M1
R1
LSF
LSEE
LSEM
LSDE
LSER
ALCP
CD
V1-1
SS/FS/OFF
Y1
P1
F1
FAV-2
PV2
AP2
AP1
HMA
HC
PV1
FAV-1
S-6P J/C HYDRAULIC/PNEUMATIC SCHEMATIC
SHEET 1 OF 2
UNLESS OTHERWISE SPECIFIED:
DIMENSIONS ARE IN INCHES
TOLERANCES:
DRN: BCA
DATE: 1/11/2018
TeeMark Manufacturing
Aitkin, MN 56431 (218)927-2200
MODEL: GEN. III
PART NO: TH1000023

SYMBOL	DESCRIPTION	TEEMARK P/N	P/N
ALCP	AIR LOGIC CONTROL PANEL	T9007520	N/A
LSDE	LIMIT SWITCH, DOOR OPEN	P01-0040	1113A-014
LSDR	LIMIT SWITCH, DOOR CLOSED	P01-0040	1113A-014
LSER	LIMIT SWITCH, EJECTOR RETRACTED	P01-0040	1113A-014
LSEM	LIMIT SWITCH, EJECTOR MIDWAY	P01-0040	1113A-014
LSEE	LIMIT SWITCH, EJECTOR EXTENDED	P01-0040	1113A-014
LSF	LIMIT SWITCH, FLAGPOLE	P01-0040	1113A-014
SS/FS/OFF	HYDRAULIC CYLINDER SHORT STROKE/FULL STROKE/EJECTOR OFF	P04-0150	VM151-N01-35BA
V1-1	DOOR CYLINDER VALVE	P01-0042	180001-112-0003
V1-2	EJECTOR CYLINDER VALVE	P01-0042	180001-112-0003
V1-3	DOOR INTERLOCK VALVE	P01-0042	180001-112-0003
SV-4	INLINE Y SHUTTLE VALVE	P04-0124	VR1210F-03
CD	DOOR CYLINDER	P01-0038	N/A
CE	EJECTOR CYLINDER	P01-0038	N/A
R1	AIR REGULATOR/FILTER	T9007521	N/A
RUN/STOP	PNEUMATIC ON/OFF SWITCH	P04-0147	M4L310-08 MNL
RESET	PNEUMATIC RESET SWITCH	P04-0148	VM130-N01-33A
M1	MANIFOLD	P01-0273	PC73CB-6
HC	HYDRAULIC CYLINDER	P02-0134	N/A
P1	PUMP	P02-0084	N/A
F1	HYDRAULIC FILTER	P02-0081	N/A
HMA	HYDRAULIC MANIFOLD ASSEMBLY	T9007519	N/A
PAV1	PRESSURE ACTIVATED VALVE 1	P04-0121	11007531
PAV2	PRESSURE ACTIVATED VALVE 2	P04-0120	11100031
Y1	CYCLE COUNTER	P01-0034	N/A

DENOTES 3/8" LINE

DENOTES 5/32" LINE

DENOTES HYDRAULIC LINE

NOTES:
1. IF A CYCLE COUNTER (Y1) IS NOT USED PLUG PORT 28 ON AIR LOGIC CONTROL PANEL (ALCP).

SHEET 2 OF 2

UNLESS OTHERWISE SPECIFIED:	DRN:	BCA	S-6PJ/VC HYDRAULIC/PNEUMATIC SCHEMATIC
DIMENSIONS ARE IN INCHES. TOLERANCES: -FRACTIONAL: 1/16 -ONE PLACE DECIMAL: ± .1 -TWO PLACE DECIMAL: ± .02 -THREE PLACE DECIMAL: ± .005 -ANGULAR: ± 1 DEGREE	DATE:	1/11/2018	
	TeeMark Manufacturing Aitkin, MN 56431 (218)927-2200		MODEL: GEN. III
			PART NO: TH1000023

SEQUENCE OF EVENTS

<u>INITIAL STATE</u>

Crusher Cylinder (HC) Retracted

- HC Cycle Select valve sets “Flagged LS”
    - Actuated Limit Sw … Short Stroke LSF-1 or Full Stroke LSF-2

Ejector Cylinder (CE) Retracted

- Actuates Ejector Retracted Limit Sw LSER

Door Open Cylinder (CD) Extended

- Actuates Door Open Limit Sw LSDE

Run/Stop PB in RUN mode

<u>MACHINE CYCLE – EJECTOR ON</u>

1. Operator selects Short Stroke or Full Stroke via Cycle selector valve HC
2. Operator selects Ejector “On” using selector valve
3. Operator loads can
4. Operator Closes Door, releases Door Open Limit Sw LSDE
    - Door Cylinder (CD) fully Closed & Retracted
        - Actuates Door Closed Limit Sw LSDR
            - Activates HC-Valve pilot AP1
5. Crusher Cylinder (HC) Extends, releases flagged limit sw LSF-1 or LSF-2
6. Crusher Cylinder (HC) fully Extended
    - Actuates hydraulic pressure switch/valve PAV.1 (set @ desired crusher extend pressure)
        - Releases HC-Valve pilot AP1
        - Activates HC-Valve pilot AP2
7. Crusher Cylinder (HC) Retracts, releases hydraulic pressure switch/valve PAV.1
8. Crusher Cylinder (HC) continues to retract
    - Actuates “Flagged” Limit Sw … Short Stroke LSF-1
    - or Actuates “Flagged” Limit Sw … Full Stroke LSF-2
    - or Actuates hydraulic pressure switch/valve PAV.2 (set @ 1000psi crusher return pressure)
        - Release HC-Valve pilot AP2
            - Crusher cylinder (HC) stops
            - Releases hydraulic pressure switch/valve PAV.2
        - Ejector Cylinder (CE) Starts Extend, releases limit sw LSER
9. Ejector Cylinder (CE) Extended, actuates limit sw LSEE
    - Ejector Cylinder (CE) Starts Retract, releases limit sw LSEE
10. Ejector Cylinder (CE) Retracts, momentary actuates limit sw LSEM
    - Door Cylinder (CD) Extends, releases limit sw LSDR
11. Door Cylinder (CD) fully Extended, actuates Door Open limit sw LSDE
    - Door Cylinder (CD) Extend pressure is released.
12. Ejector Cylinder (CE) fully Retracted, actuates limit sw LSER
13. Cycle Complete
14. Repeat at step 1 above

MACHINE CYCLE – EJECTOR OFF

1. Operator selects “Flagged LS” Short or Full Stroke using HC Cycle Select valve
2. Operator selects Ejector “Off” using selector valve
3. Operator loads can
4. Operator Closes Door, releases Door Open Limit Sw LSDE
    - Door Cylinder (CD) fully Closed & Retracted
        - Actuates Door Closed Limit Sw LSDR
            - Activates HC-Valve pilot AP1
5. Crusher Cylinder (HC) Extends, releases flagged limit sw LSF-1 or LSF-2
6. Crusher Cylinder (HC) fully Extended
    - Actuates hydraulic pressure switch/valve PAV.1 (set @ desired crusher extend pressure)
        - Releases HC-Valve pilot AP1
        - Activates HC-Valve pilot AP2
7. Crusher Cylinder (HC) Retracts, releases hydraulic pressure switch/valve PAV.1
8. Crusher Cylinder (HC) continues to retract
    - Actuates “Flagged” Limit Sw … Short Stroke LSF-1
    - or Actuates “Flagged” Limit Sw … Full Stroke LSF-2
    - or Actuates hydraulic pressure switch/valve PAV.2 (set @ 1000psi crusher return pressure)
        - Release HC-Valve pilot AP2
            - Crusher cylinder (HC) stops
            - Releases hydraulic pressure switch/valve PAV.2
        - Door Cylinder (CD) Extends, releases limit sw LSDR
9. Door Cylinder (CD) fully Extended, actuates Door Open limit sw LSDE
    - Door Cylinder (CD) Extend pressure is released.
10. Cycle Complete
11. Repeat at step 1 above

MACHINE CYCLE – STOP / RESET

Run/Stop Select Valve in STOP mode (Pushed)

- Exhausts pilot supply to "V2" Ejector Air Supply Valve & HC Valve Pilots AP1/AP2
- Exhausts Control Air supply to Air Logic modules and relay circuit
- Exhausts all air pilot signals
- Enables Reset PB

RESET PB

- Air Logic modules are reset to initial state for new Cycle start mode
- Activates HC-Valve pilot AP2
    - HC cylinder retracts while holding RESET PB
        - Note: HC cylinder will only retract when Door is Closed
        - Note: Anytime operator releases RESET PB the HC cylinder will stop
- Operator must manually open Door prior to returning to RUN mode
    - System will not start a new cycle until the door has been opened after a reset condition.